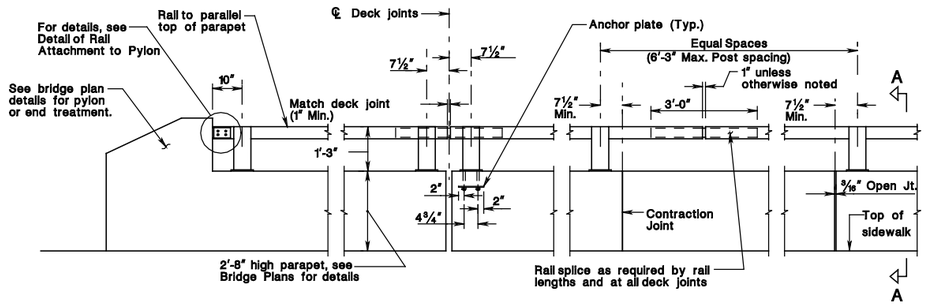

TYPICAL EXTERIOR ELEVATION OF CONTINUOUS RAILING SYSTEM

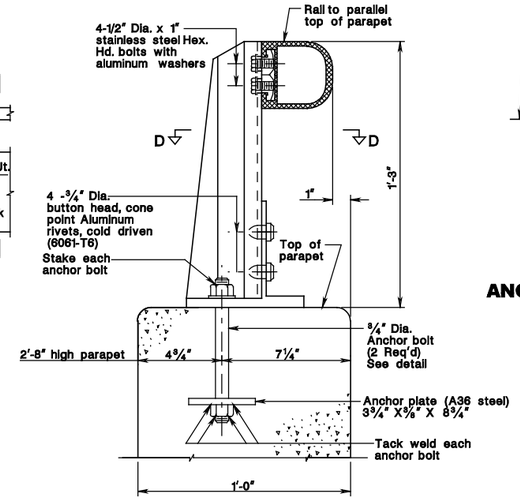

SECTION A–A

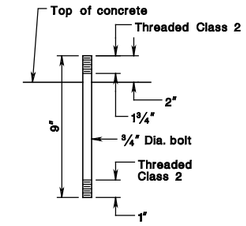

ANCHOR BOLT DETAIL

NOTES:

1. Use material for posts, bases, rails, and rail clamps conforming to ASTM B221. aluminum alloy 6061-T6.
2. Use washers conforming to ASTM B209 Alclad 2024-T3 and nuts conforming to ASTM B211, aluminum Alloy 6061-T6.
3. Use anchor bolts conforming to ASTM A276 stainless steel, Type 302, Type 304 or Type 430. Use top nuts,Aluminum thick nuts ASTM B211 or B316 Alloy 6061-T6 Class 2 thread. Use bottom nuts conforming to ASTM A194.
4. Use dam plates to close all open railing ends. Use material conforming to ASTM B209 Aluminum Alloy 6061-T6. As an alternate, drive-in end caps may be used. Use caps conforming to aluminum alloy sand mold castings complying with ASTM B26, alloy SG 356.6-T6.
5. Weld end caps to the rails.
6. Use Aluminum Alloy shim material where necessary for post alignment and required by the Engineer. Use shim material conforming to ASTM B209,Alloy 1100-0.
7. Paint underside of base with a heavy coat of non-aluminum epoxy mastic primer.
8. Ensure that all anchor bolt holes and spaces between base plates and concrete are thoroughly caulked with a cold-poured joint sealer conforming to Subsection 914.02 of NJDOT Standard Specifications, Joint Material ASTM D 5893, Type NS.

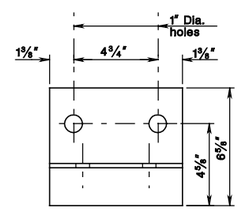

TOP VIEW

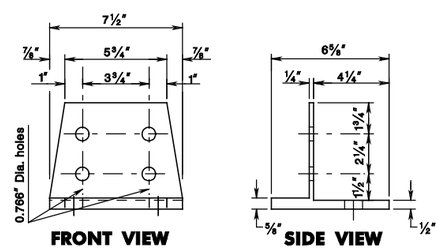

FRONT VIEW

SIDE VIEW

POST BASE

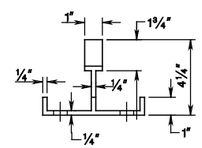

TOP VIEW

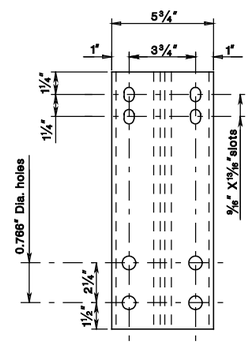

FRONT VIEW

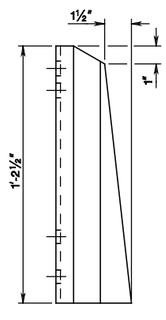

SIDE VIEW

POST STEM

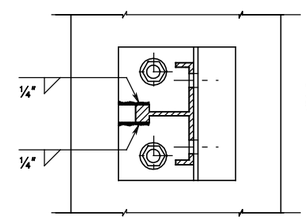

SECTION D–D

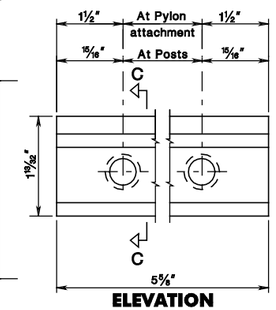

ELEVATION

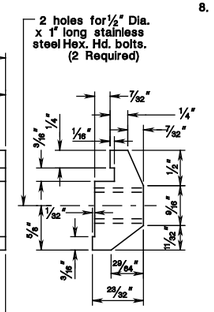

SECTION C–C

DETAILS OF RAIL CLAMP

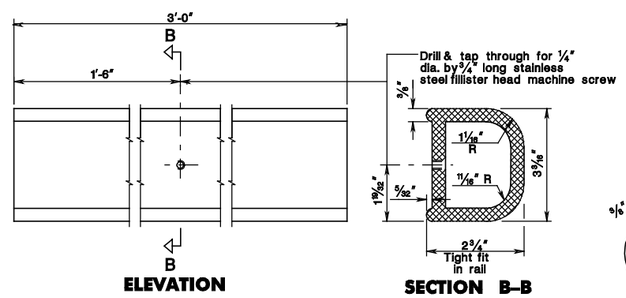

ELEVATION

SECTION B–B

DETAIL OF RAIL SPLICE

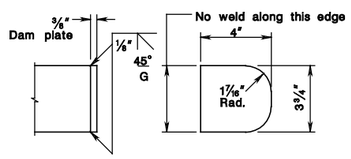

DAM PLATE DETAIL

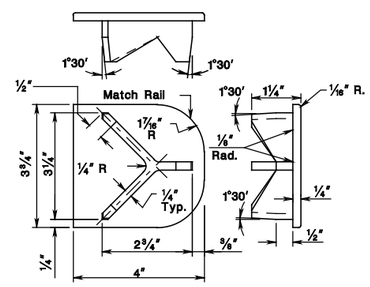

ALTERNATE DETAIL – END CAP

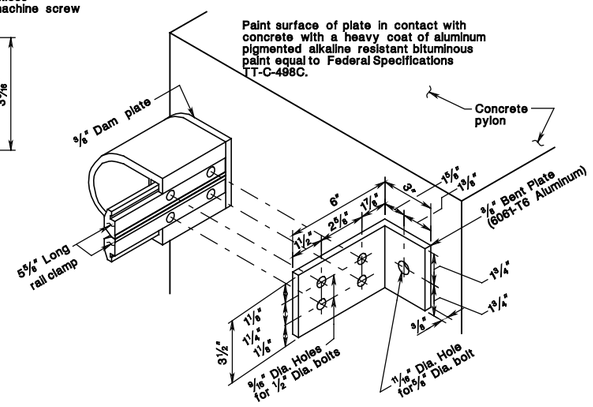

DETAIL OF RAIL ATTACHMENT TO PYLON

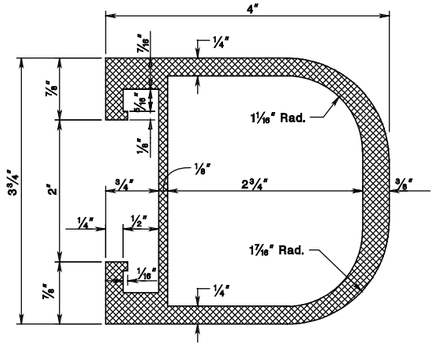

SECTION THROUGH RAIL

BCD-509-4.1

1–RAIL ALUMINUM RAILING (FOR USE ON NON–NHS BRIDGES ONLY)

N.T.S.

BCD-509-4

NEW JERSEY DEPARTMENT OF TRANSPORTATION
BUREAU OF STRUCTURAL ENGINEERING

BRIDGE CONSTRUCTION DETAILS

ID=TPSYLL date=28-SEP-2016 14:15 scale=0.178016:1.000000 pen table=\\NJDOTPSQW8\Vlargstas\NJDOTWS\Projects\NJDOTEng\Iplot\TBLs\Non-Roadway\bridge-bdc7.tbl
BDC16D-01-ORIGINAL SHEET
file=