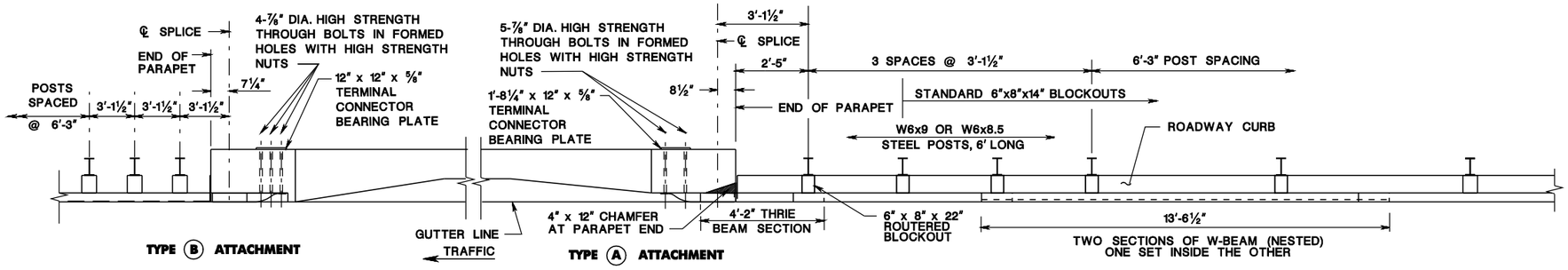

PLAN

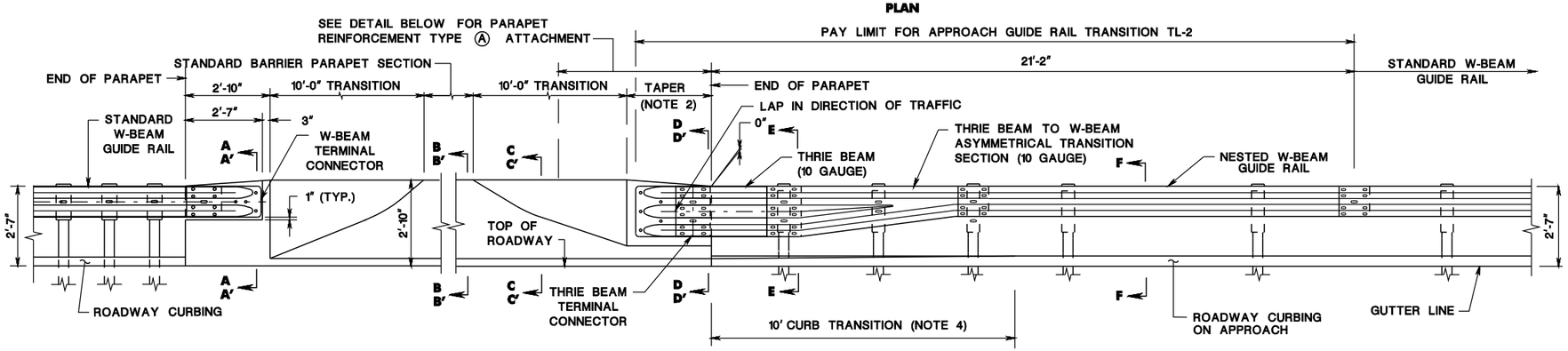

ELEVATION

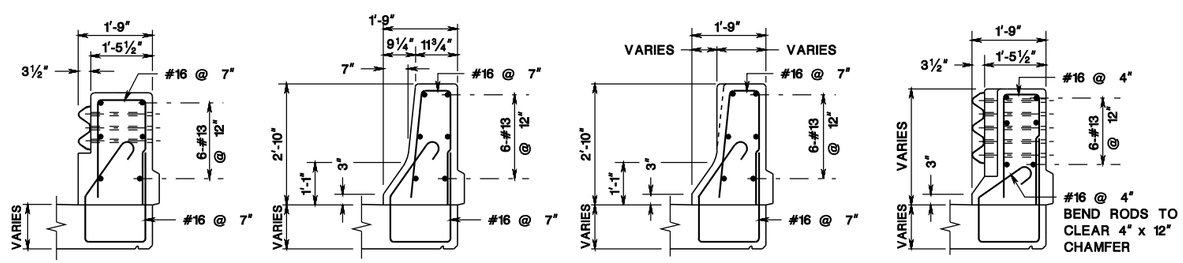

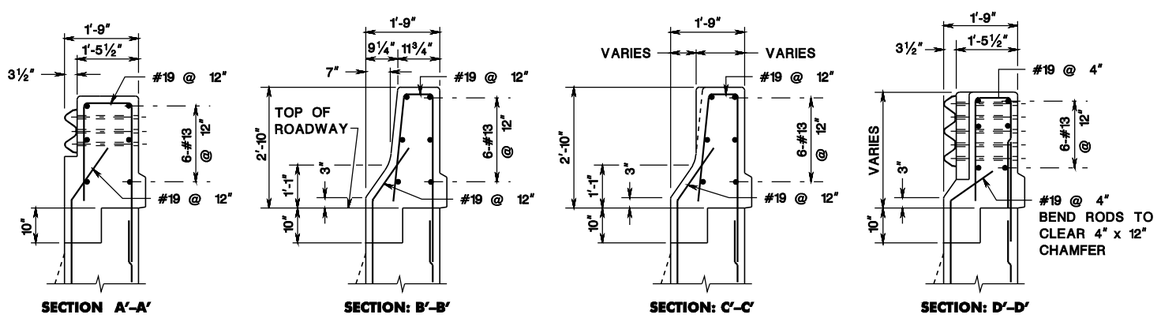

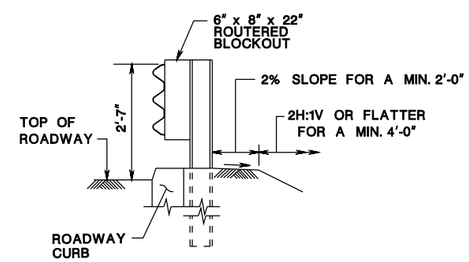

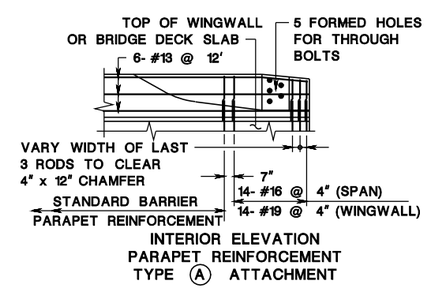

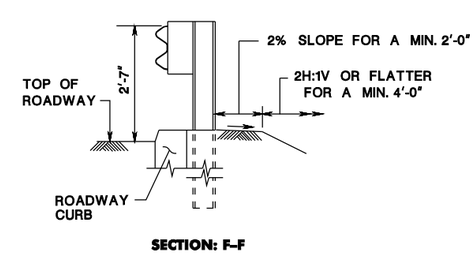

NOTES:

1. SEE CD-609-13 FOR ADDITIONAL NOTES AND DETAILS.
2. THE MINIMUM TAPER LENGTH IS BASED ON PARAPET HEIGHT. THE TAPER MUST BE 5:1 OR FLATTER WITH 8:1 DESIRABLE. SEE BRIDGE PLANS FOR TAPER LENGTH.
3. REINFORCEMENT STEEL IS IN METRIC UNITS.
4. TRANSITION LAST 10 FEET OF ROADWAY CURBING TO MATCH BARRIER PARAPET SHAPE.
5. FOR ADDITIONAL PARAPET DETAILS & DIMENSIONS, SEE BCD-507-3.4.

GUIDE RAIL ATTACHMENT – DESIGN SPEED 45 MPH OR LESS (MASH TL-2)
EXISTING NJ BARRIER PARAPET (WITH ROADWAY CURBING ON APPROACH)

BEAM GUIDE RAIL ATTACHMENTS

N.T.S.

CD-609-17E

NEW JERSEY DEPARTMENT OF TRANSPORTATION

CONSTRUCTION DETAILS

CD-609-17E.1

78E
164

BDC17D-02-NEW SHEET

ID= TP2VTLL date=19-JUL-2017 14:36 scale=63.99103211000000 pen table=\\NJDOTRTWS\Vdaystem\NJDOTWS\Projects\NJDOTEng\pilot\TBLs\Roadway\Details_11x17.tbl

file=