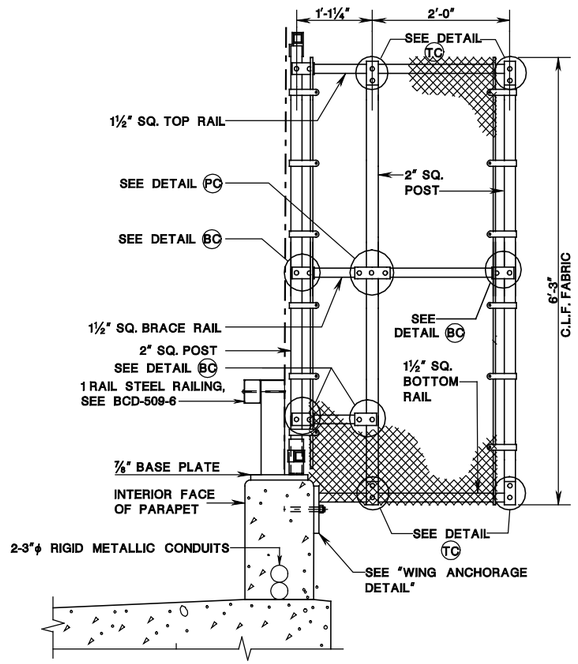

ELEVATION OF WING FOR 6'-3" HIGH STRAIGHT CHAIN-LINK FENCE

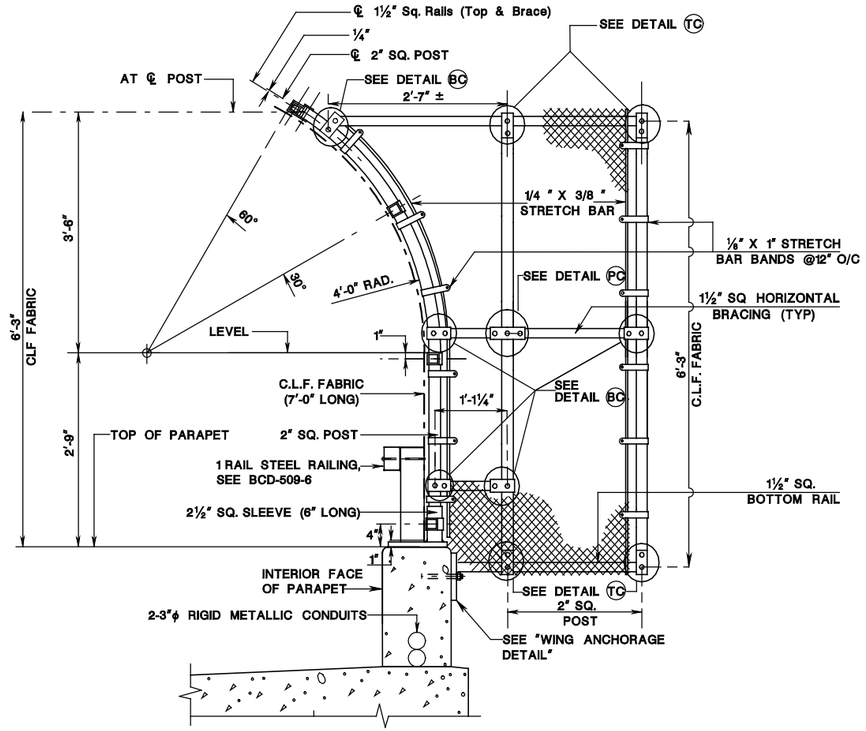

ELEVATION OF WING FOR 6'-3" HIGH CURVED TOP CHAIN-LINK FENCE

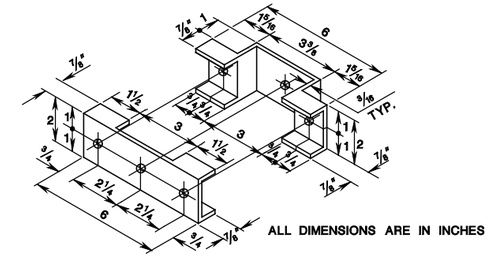

DETAIL PC

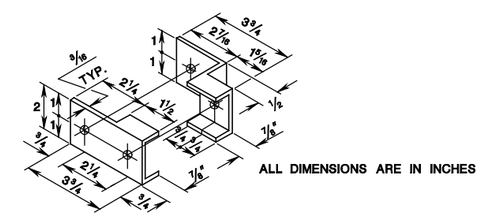

DETAIL BC

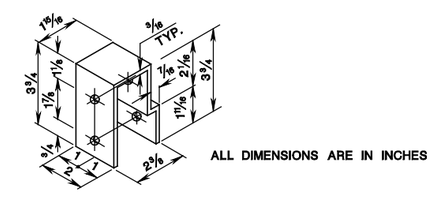

DETAIL TC

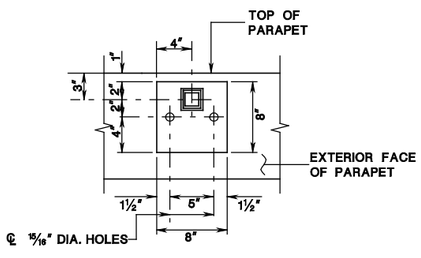

WING BASE PLATE DETAIL

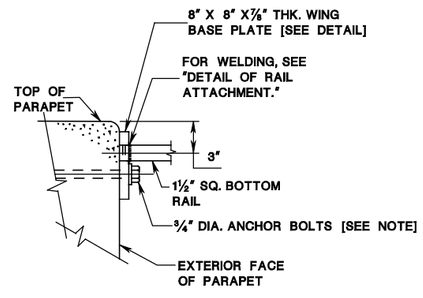

WING ANCHORAGE DETAIL

NOTE:
ENSURE THAT ANCHOR BOLTS ARE INSTALLED IN CORED HOLES NO GREATER THAN THE BOLT DIAMETER PLUS ¼". ENSURE THAT THE EMBEDMENT DEPTH IS AS PER MANUFACTURER'S RECOMMENDATION AND DESIGN OF THE EMBEDMENT DEPTH IS BASED ON A CONCRETE COMPRESSIVE STRENGTH OF 4000PSI. USE EPOXY GROUTED BOLTS IN PLACE AS PER MANUFACTURER'S RECOMMENDATION. TEST ADHESIVE ANCHOR SYSTEM IN ACCORDANCE WITH SUBSECTION 908.01.04 OF NJDOT STANDARD SPECIFICATIONS FOR ROAD AND BRIDGE CONSTRUCTION.

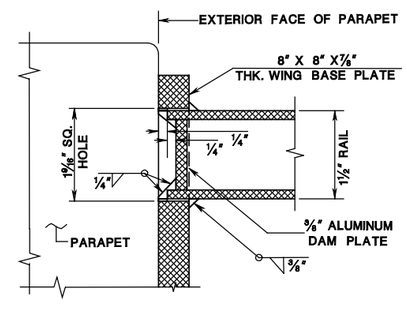

DETAIL OF RAIL ATTACHMENT

TEST LEVEL 4
BCD-509-3.1

WING FOR CHAIN-LINK FENCE, STRAIGHT AND CURVED TOP

N.T.S.

BCD-509-3

NEW JERSEY DEPARTMENT OF TRANSPORTATION
BUREAU OF STRUCTURAL ENGINEERING

BRIDGE CONSTRUCTION DETAILS

pen table= \\NJDOTRBWS\Respaten\NJDOTWS\Projects\NJDOTWS\Projects\Non-Roadway\bridge-ss57name.tbl
scale=0.178016:1.000000
date=28-SEP-2016 14:15
ID=TPXVIIJ
BDC16D-01-ORIGINAL SHEET
file=